THIS DOCUMENT CONTAINS PROPRIETARY INFORMATION WHICH IS THE PROPERTY OF QSC AUDIO PRODUCTS, THAT MAY NOT BE DISCLOSED, REPRODUCED OR USED WITHOUT EXPRESS WRITTEN CONSENT FROM QSC AUDIO PRODUCTS.

REV	DESCRIPTION	EFF. DATE	CHK	APPROVED DATE
A	PRODUCTION RELEASE PER ECO 3743	6-29-9		TS 6-29-98
B	REVISED PER ECO 4061 AA	9-3-99		

RAVE/RAPID RAVE ANALOG COMBINED

Analog Inputs 0-1
qscaBai0.sch
SHT 14

Analog Inputs 2-3
qscaBai1.sch
SHT 15

Analog Inputs 4-5
qscaBai2.sch
SHT 2

Analog Inputs 6-7
qscaBai3.sch
SHT 13

Analog Inputs 8-9
qscaBai4.sch
SHT 21

Analog Inputs 10-11
qscaBai5.sch
SHT 22

Analog Inputs 12-13
qscaBai6.sch
SHT 19

Analog Inputs 14-15
qscaBai7.sch
SHT 20

Analog Outputs 0-1
qscaBao0.sch
SHT 3

Analog Outputs 2-3
qscaBao1.sch
SHT 11

Analog Outputs 4-5
qscaBao2.sch
SHT 31

Analog Outputs 6-7
qscaBao3.sch
SHT 12

Analog Outputs 8-9
qscaBao4.sch
SHT 23

Analog Outputs 10-11
qscaBao5.sch
SHT 30

Analog Outputs 12-13
qscaBao6.sch
SHT 25

Analog Outputs 14-15
qscaBao7.sch
SHT 24

Input Multiplexer # 0
qscaBmux.sch
SHT 18

Input Mux #2 and #3
qscaBmi2.sch
SHT 9

Output P/S #1 & Relay VR
qscaBmo1.sch
SHT 26

Output P/S #2 and #3
qscaBmo2.sch
SHT 27

Relay Control IC #0
qscaBre0.sch
SHT 28

Mechanical parts - non BOM
qscaBmec.sch
SHT 29

Connectors
qscaBcon.sch
SHT 7

Analog Voltage Regulator -A
qscaBvr2.sch
SHT 32

Digital Processing Unit
qscaBdpu.sch
SHT 6

100BASE-TX MAC Layer
qscaBmac.sch
SHT 5

100BASE-TX PHY Layer
qscaBphy.sch
SHT 4

Clock and Logic
qscaBclk.sch
SHT 8

Analog I/O Signal Drivers
qscaBalg.sch
SHT 17

LED and Relay Control Logic
qscaBled.sch
SHT 16

Analog Voltage +Regulators
qscaBvrp.sch
SHT 33

VCXO Control DAC
qscaBdac.sch
SHT 10

Output capacitors
qscaBcp0.sch
SHT 34

Output capacitors
qscaBcp1.sch
SHT 34

Output capacitors
qscaBcp8.sch
SHT 34

Phase Locked Loop Circuit
qscaBpl2.sch
SHT 36

Phase Locked Loop Circuit
qscaBpll.sch
SHT 35

RAVE/RAPID RAVE 160
USE THE FOLLOWING SHEETS

SHT 3
SHT 4
SHT 5
SHT 6
SHT 7
SHT 8
SHT 10
SHT 11
SHT 12
SHT 16
SHT 17
SHT 23
SHT 24
SHT 25
SHT 26
SHT 27
SHT 28
SHT 30
SHT 31
SHT 33
SHT 34 qscaBcp0.sch
SHT 35

RAVE/RAPID RAVE 161
USE THE FOLLOWING SHEETS

SHT 2
SHT 4
SHT 5
SHT 6
SHT 7
SHT 8
SHT 9
SHT 10
SHT 13
SHT 14
SHT 15
SHT 16
SHT 17
SHT 18
SHT 19
SHT 20
SHT 21
SHT 22
SHT 32
SHT 33
SHT 34 qscaAcp1.sch
SHT 35 qscaApll.sch

RAVE/RAPID RAVE 188
USE THE FOLLOWING SHEETS

SHT 2
SHT 4
SHT 5
SHT 6
SHT 7
SHT 8
SHT 10
SHT 13
SHT 14
SHT 15
SHT 16
SHT 17
SHT 18
SHT 23
SHT 24
SHT 25
SHT 26
SHT 30
SHT 32
SHT 33
SHT 34 qscaBcp8.sch
SHT 35 qscaBpll.sch

Error : QSCLOGO.BMP file not found.

AUDIO PRODUCTS, INC.
1675 MACARTHUR BLVD.
COSTA MESA, CA 92626

Title: **RAVE Analog Block Diagram**

Size: B | Number: **SH-000861-00** | Rev **B**

File: C:\DATA\schematics\Rave_revB\Qscabblk.DDB - Documents\Qscabblk.sch

Date: 12-Dec-2001 | Eng: Karl Fitzke | Sheet 1 of 36

THIS DOCUMENT CONTAINS PROPRIETARY INFORMATION WHICH IS THE PROPERTY OF QSC AUDIO PRODUCTS, THAT MAY NOT BE DISCLOSED, REPRODUCED OR USED WITHOUT EXPRESS WRITTEN CONSENT FROM QSC AUDIO PRODUCTS.

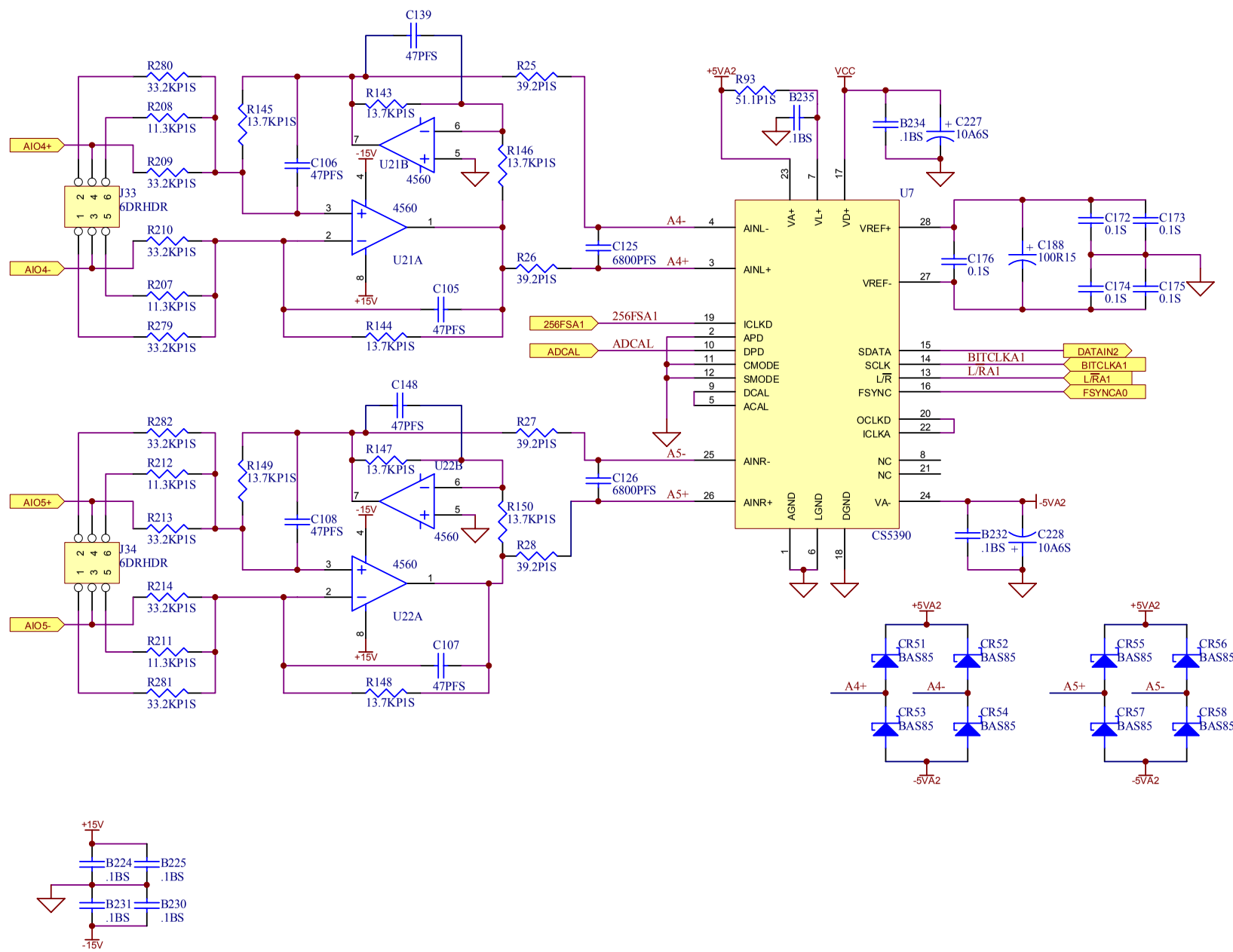

Error : QSCLOGO.BMP file not found.

AUDIO PRODUCTS, INC.
1675 MACARTHUR BLVD.
COSTA MESA, CA 92626

Title: **RAVE Analog Inputs # 4-5**

Size: B | Number: **SH-000861-00** | Rev **B**

File: C:\DATA\schematics\Rave_revB\Qscabblk.DDB - Documents\qscaBai2.sch

Date: 12-Dec-2001 | Eng: Karl Fitzke | Sheet 2 of 36

THIS DOCUMENT CONTAINS PROPRIETARY INFORMATION WHICH IS THE PROPERTY OF QSC AUDIO PRODUCTS, THAT MAY NOT BE DISCLOSED, REPRODUCED OR USED WITHOUT EXPRESS WRITTEN CONSENT FROM QSC AUDIO PRODUCTS.

100Base-TX/10BaseT Interface (Autoconfiguring)

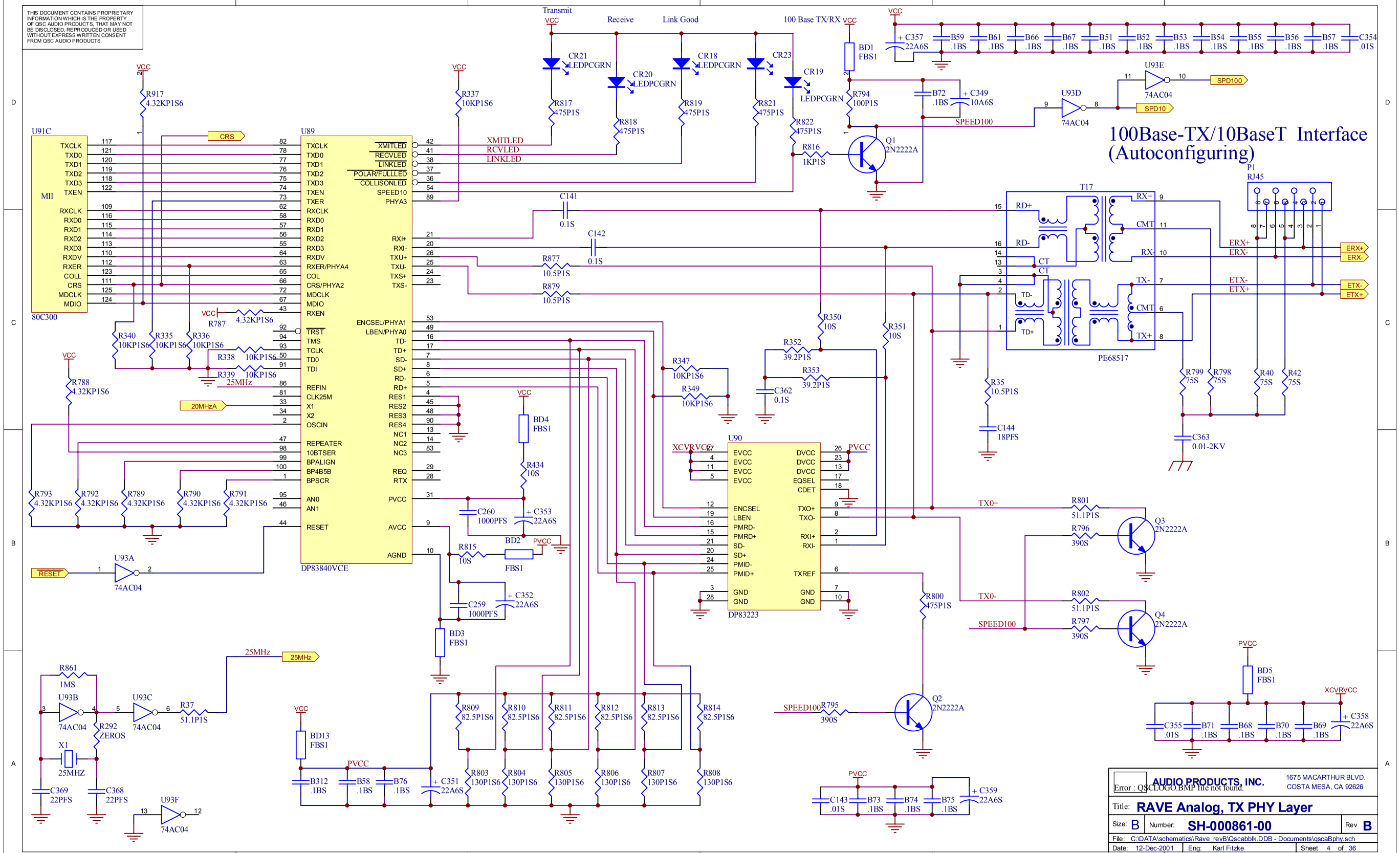

Error : QSCLOGO.BMP file not found.

AUDIO PRODUCTS, INC.
1675 MACARTHUR BLVD.
COSTA MESA, CA 92626

Title: **RAVE Analog, TX PHY Layer**

Size: B | Number: **SH-000861-00** | Rev **B**

File: C:\DATA\schematics\Rave_revB\Qscabblk.DDB - Documents\qscaBphy.sch

Date: 12-Dec-2001 | Eng: Karl Fitzke | Sheet 4 of 36

THIS DOCUMENT CONTAINS PROPRIETARY INFORMATION WHICH IS THE PROPERTY OF QSC AUDIO PRODUCTS, THAT MAY NOT BE DISCLOSED, REPRODUCED OR USED WITHOUT EXPRESS WRITTEN CONSENT FROM QSC AUDIO PRODUCTS.

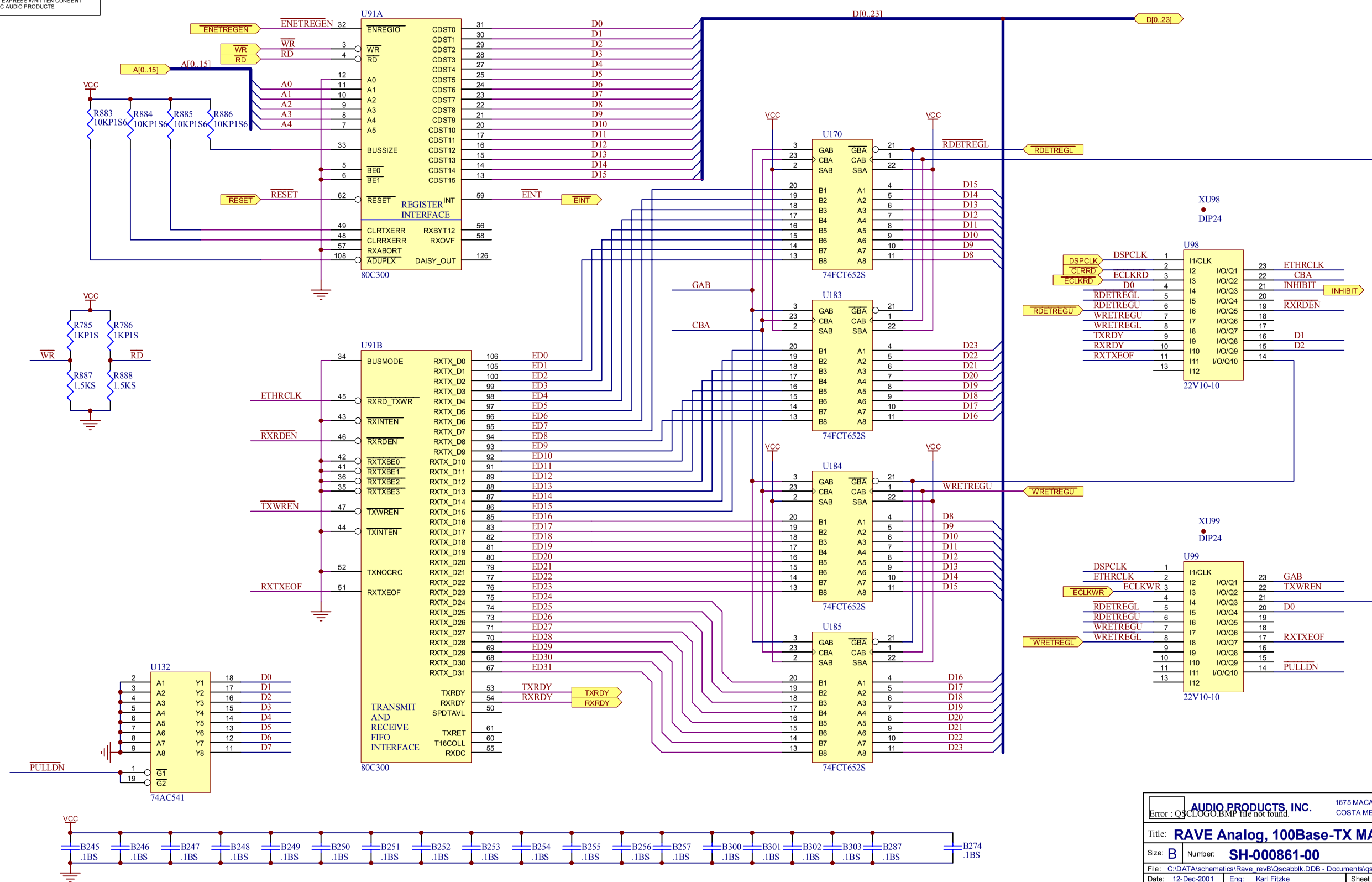

Error : QSCLOGO.BMP file not found.

AUDIO PRODUCTS, INC.
1675 MACARTHUR BLVD.
COSTA MESA, CA 92626

Title: **RAVE Analog, 100Base-TX MAC**

Size: B | Number: **SH-000861-00** | Rev **B**

File: C:\DATA\schematics\Rave_revB\Qscabblk.DDB - Documents\qscaBmac.sch

Date: 12-Dec-2001 | Eng: Karl Fitzke | Sheet 5 of 36

THIS DOCUMENT CONTAINS PROPRIETARY INFORMATION WHICH IS THE PROPERTY OF QSC AUDIO PRODUCTS, THAT MAY NOT BE DISCLOSED, REPRODUCED OR USED WITHOUT EXPRESS WRITTEN CONSENT FROM QSC AUDIO PRODUCTS.

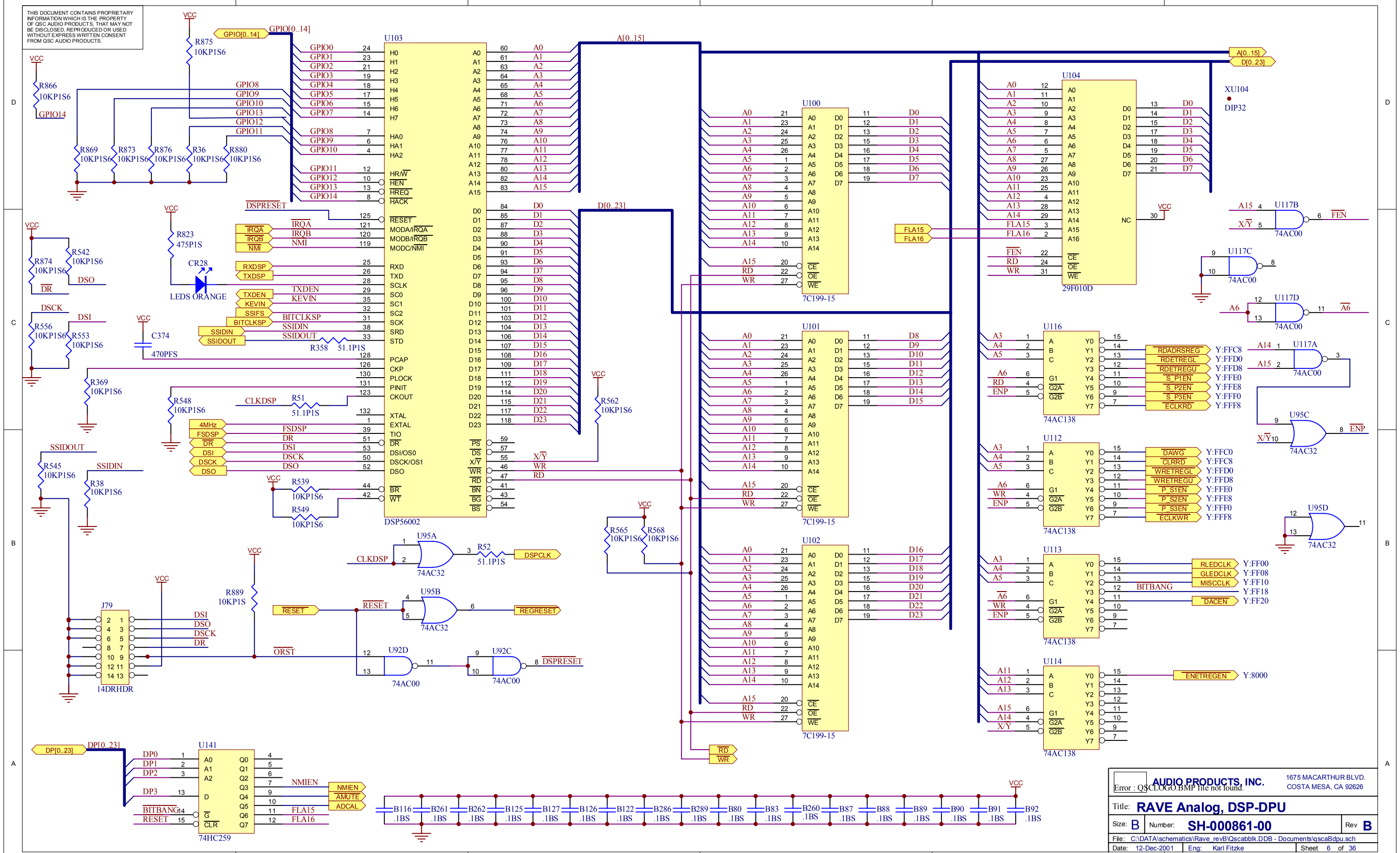

Error : QSCLOGO.BMP file not found.

AUDIO PRODUCTS, INC.
1675 MACARTHUR BLVD.
COSTA MESA, CA 92626

Title: **RAVE Analog, DSP-DPU**

Size: B | Number: **SH-000861-00** | Rev **B**

File: C:\DATA\schematics\Rave_revB\Qscabblk.DDB - Documents\qscaBdpu.sch

Date: 12-Dec-2001 | Eng: Karl Fitzke | Sheet 6 of 36

THIS DOCUMENT CONTAINS PROPRIETARY INFORMATION WHICH IS THE PROPERTY OF QSC AUDIO PRODUCTS, THAT MAY NOT BE DISCLOSED, REPRODUCED OR USED WITHOUT EXPRESS WRITTEN CONSENT FROM QSC AUDIO PRODUCTS.

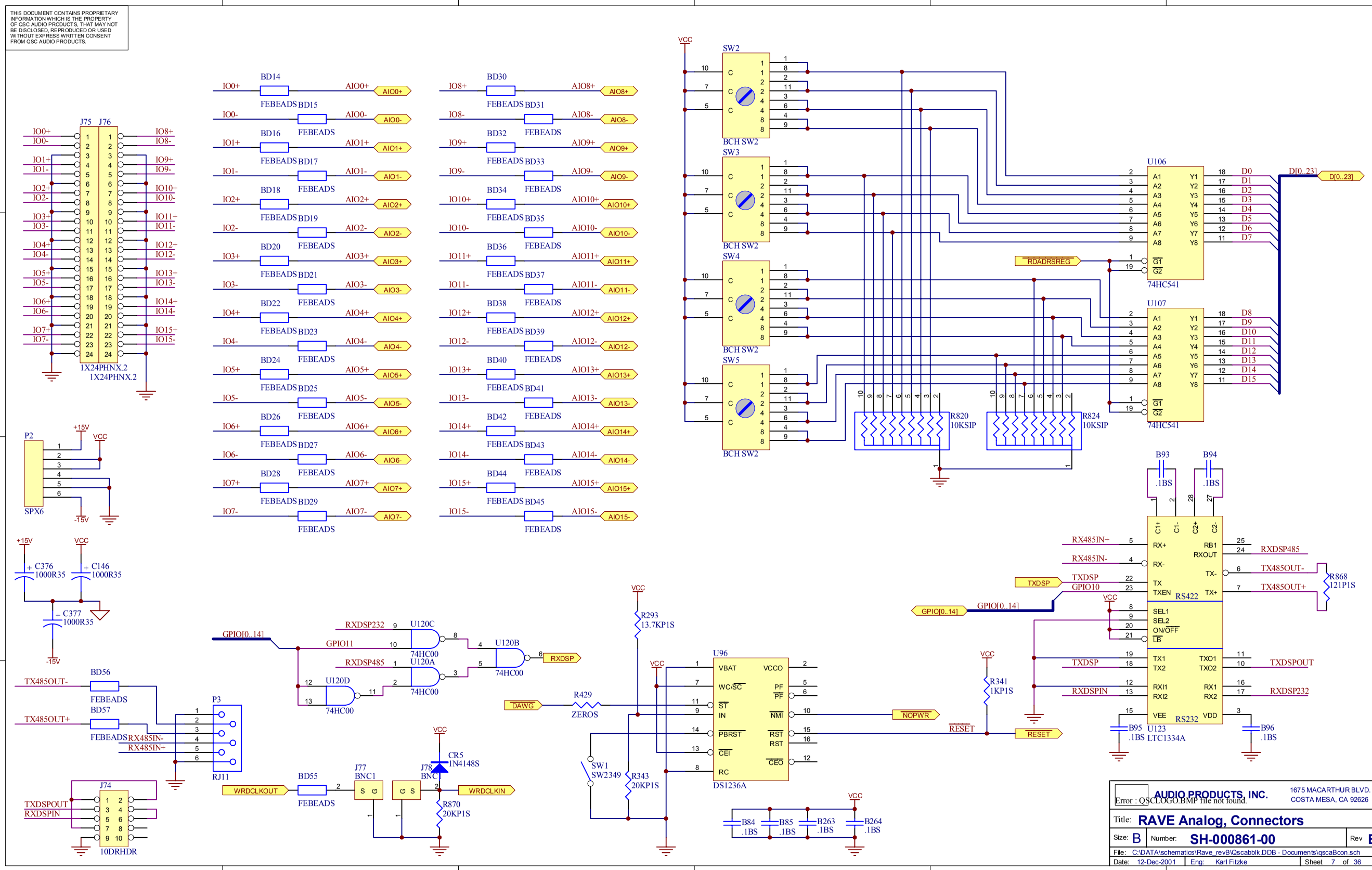

Error : QSCLOGO.BMP file not found.

AUDIO PRODUCTS, INC.
1675 MACARTHUR BLVD.
COSTA MESA, CA 92626

Title: **RAVE Analog, Connectors**

Size: B | Number: **SH-000861-00** | Rev **B**

File: C:\DATA\schematics\Rave_revB\Qscabblk.DDB - Documents\qscaBcon.sch

Date: 12-Dec-2001 | Eng: Karl Fitzke | Sheet 7 of 36

THIS DOCUMENT CONTAINS PROPRIETARY INFORMATION WHICH IS THE PROPERTY OF QSC AUDIO PRODUCTS, THAT MAY NOT BE DISCLOSED, REPRODUCED OR USED WITHOUT EXPRESS WRITTEN CONSENT FROM QSC AUDIO PRODUCTS.

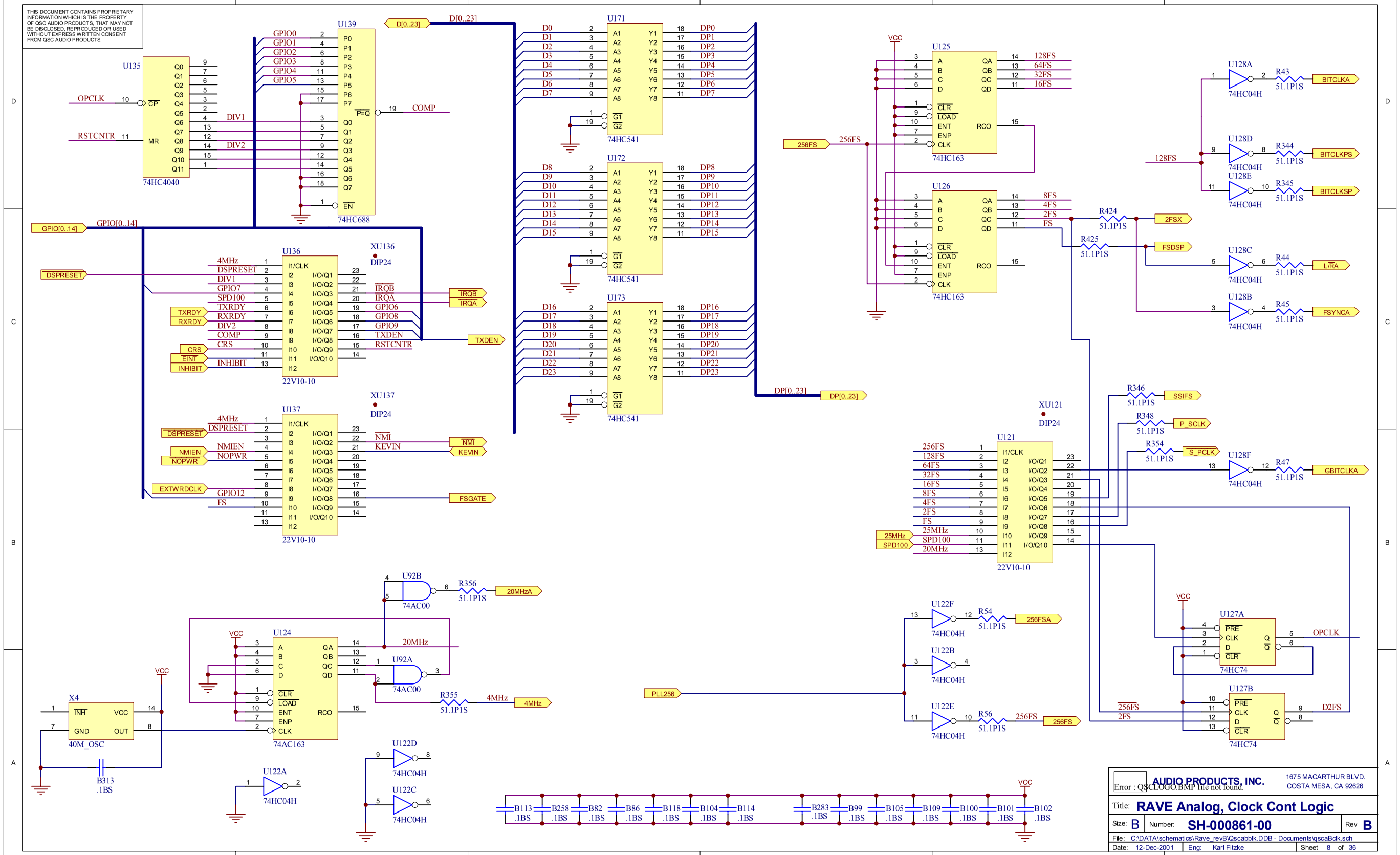

Error : QSCLOGO.BMP file not found.

AUDIO PRODUCTS, INC.
1675 MACARTHUR BLVD.
COSTA MESA, CA 92626

Title: **RAVE Analog, Clock Cont Logic**

Size: B | Number: **SH-000861-00** | Rev **B**

File: C:\DATA\schematics\Rave_revB\Qscabblk.DDB - Documents\qscaBclk.sch

Date: 12-Dec-2001 | Eng: Karl Fitzke | Sheet 8 of 36

THIS DOCUMENT CONTAINS PROPRIETARY INFORMATION WHICH IS THE PROPERTY OF QSC AUDIO PRODUCTS, THAT MAY NOT BE DISCLOSED, REPRODUCED OR USED WITHOUT EXPRESS WRITTEN CONSENT FROM QSC AUDIO PRODUCTS.

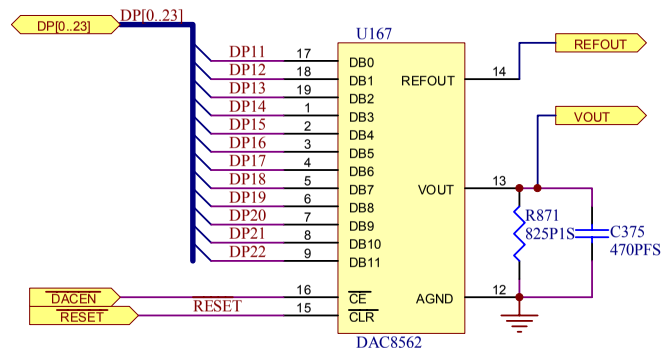

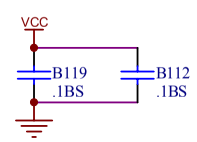

Error : QSCLOGO.BMP file not found.

AUDIO PRODUCTS, INC.
1675 MACARTHUR BLVD.
COSTA MESA, CA 92626

Title: RAVE Analog, PLL / VCXO

Size: B | Number: SH-000861-00 | Rev B

File: C:\DATA\schematics\Rave_revB\Qscabblk.DDB - Documents\qscaBdac.sch

Date: 12-Dec-2001 | Eng: Karl Fitzke | Sheet 10 of 36

THIS DOCUMENT CONTAINS PROPRIETARY INFORMATION WHICH IS THE PROPERTY OF QSC AUDIO PRODUCTS, THAT MAY NOT BE DISCLOSED, REPRODUCED OR USED WITHOUT EXPRESS WRITTEN CONSENT FROM QSC AUDIO PRODUCTS.

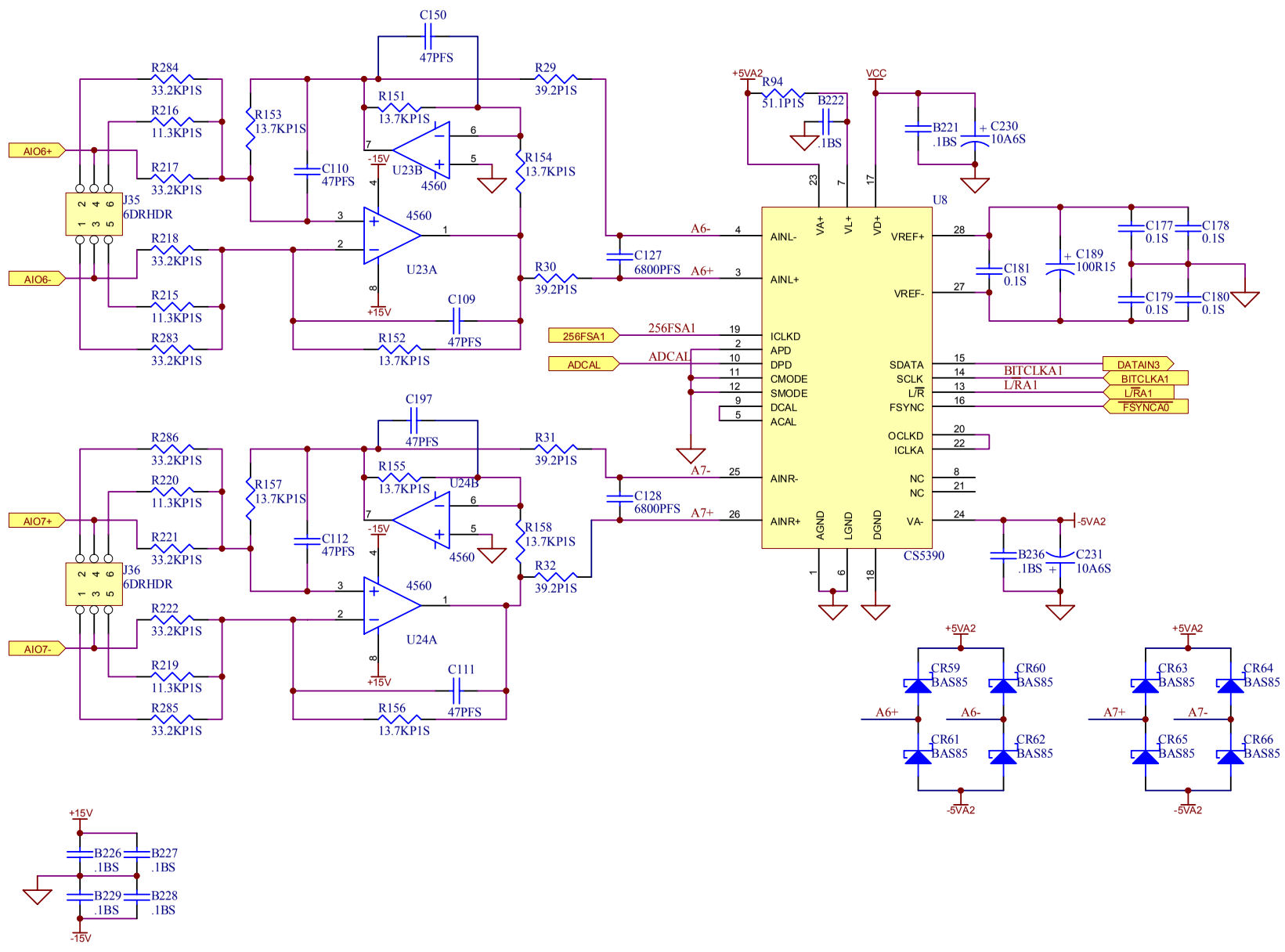

Error : QSCLOGO.BMP file not found.

AUDIO PRODUCTS, INC.
1675 MACARTHUR BLVD.
COSTA MESA, CA 92626

Title: **RAVE Analog Inputs # 6-7**

Size: B | Number: **SH-000861-00** | Rev **B**

File: C:\DATA\schematics\Rave_revB\Qscabblk.DDB - Documents\qscaBai3.sch

Date: 12-Dec-2001 | Eng: Karl Fitzke | Sheet 13 of 36

THIS DOCUMENT CONTAINS PROPRIETARY INFORMATION WHICH IS THE PROPERTY OF QSC AUDIO PRODUCTS, THAT MAY NOT BE DISCLOSED, REPRODUCED OR USED WITHOUT EXPRESS WRITTEN CONSENT FROM QSC AUDIO PRODUCTS.

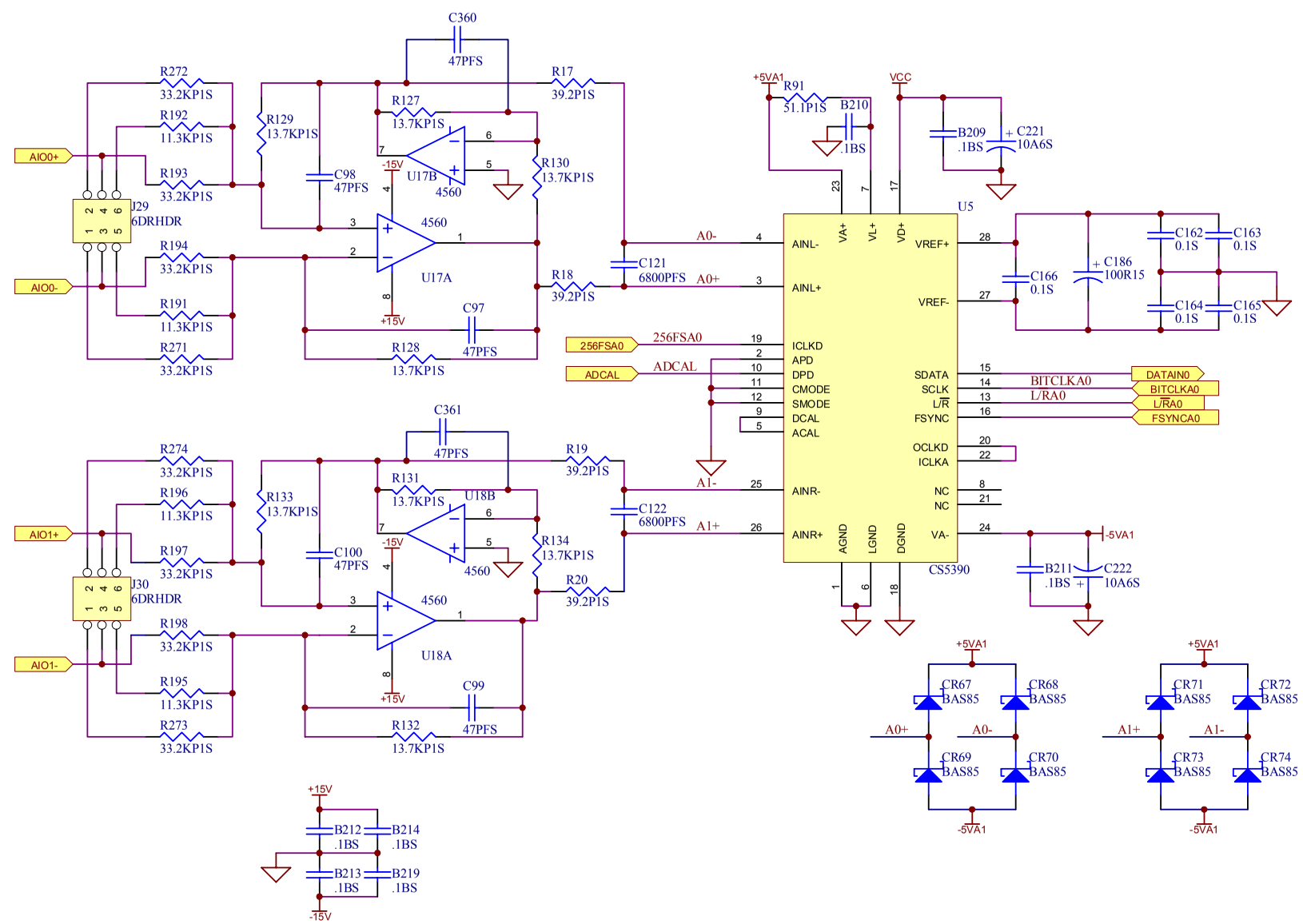

Error : QSCLOGO.BMP file not found.

AUDIO PRODUCTS, INC.
1675 MACARTHUR BLVD.
COSTA MESA, CA 92626

Title: **RAVE Analog Inputs # 0-1**

Size: B | Number: **SH-000861-00** | Rev **B**

File: C:\DATA\schematics\Rave_revB\Qscabblk.DDB - Documents\qscaBai0.sch

Date: 12-Dec-2001 | Eng: Karl Fitzke | Sheet 14 of 36

THIS DOCUMENT CONTAINS PROPRIETARY INFORMATION WHICH IS THE PROPERTY OF QSC AUDIO PRODUCTS, THAT MAY NOT BE DISCLOSED, REPRODUCED OR USED WITHOUT EXPRESS WRITTEN CONSENT FROM QSC AUDIO PRODUCTS.

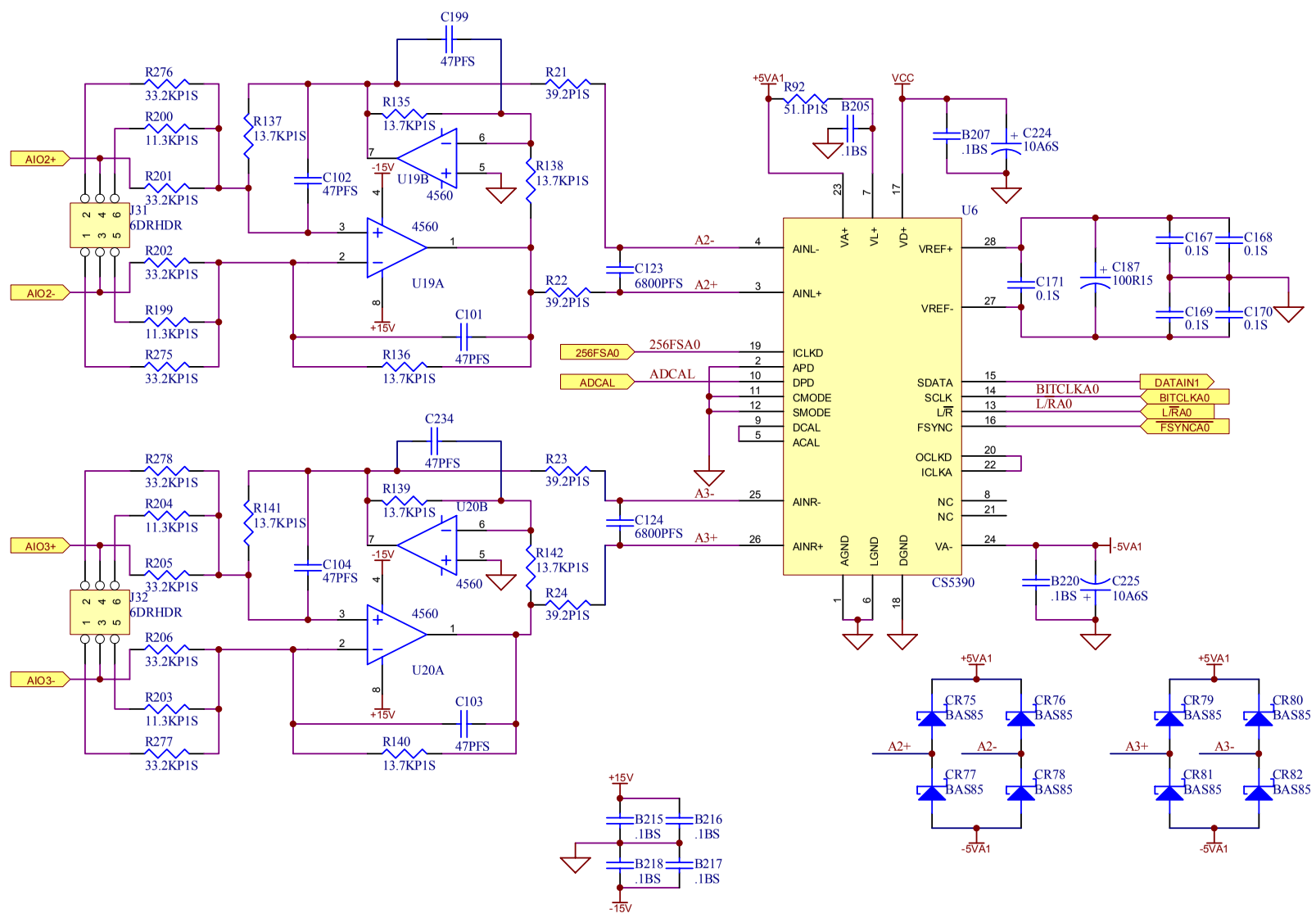

Error : QSCLOGO.BMP file not found.

AUDIO PRODUCTS, INC.
1675 MACARTHUR BLVD.
COSTA MESA, CA 92626

Title: **RAVE Analog Inputs # 2-3**

Size: B | Number: **SH-000861-00** | Rev **B**

File: C:\DATA\schematics\Rave_revB\Qscabblk.DDB - Documents\qscaBai1.sch

Date: 12-Dec-2001 | Eng: Karl Fitzke | Sheet 15 of 36

THIS DOCUMENT CONTAINS PROPRIETARY INFORMATION WHICH IS THE PROPERTY OF QSC AUDIO PRODUCTS, THAT MAY NOT BE DISCLOSED, REPRODUCED OR USED WITHOUT EXPRESS WRITTEN CONSENT FROM QSC AUDIO PRODUCTS.

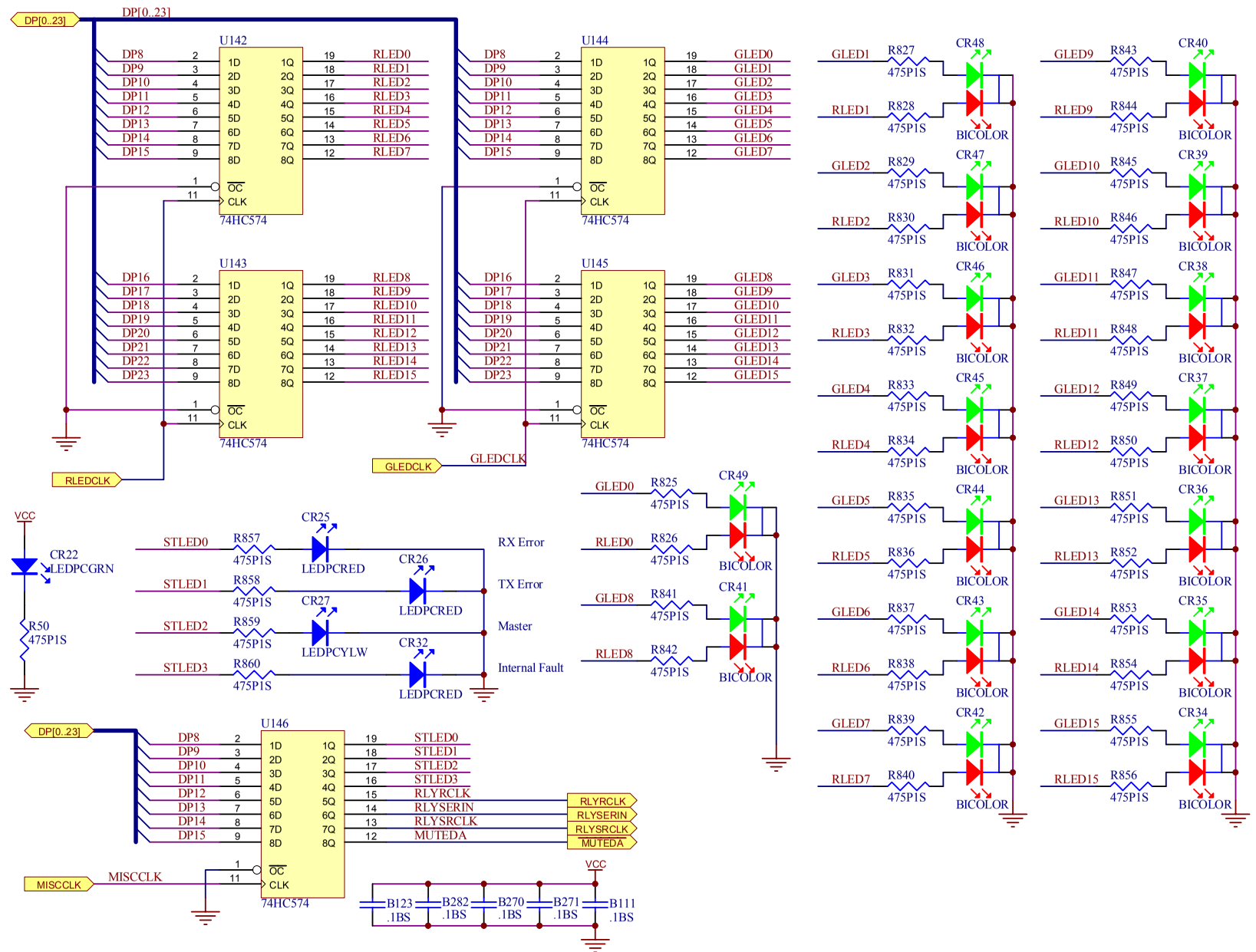

Error : QSCLOGO.BMP file not found.

AUDIO PRODUCTS, INC.
1675 MACARTHUR BLVD.
COSTA MESA, CA 92626

Title: **RAVE Analog, LED & Relay Logic**

Size: B | Number: **SH-000861-00** | Rev **B**

File: C:\DATA\schematics\Rave_revB\Qscabblk.DDB - Documents\qscaBled.sch

Date: 12-Dec-2001 | Eng: Karl Fitzke | Sheet 16 of 36

THIS DOCUMENT CONTAINS PROPRIETARY INFORMATION WHICH IS THE PROPERTY OF QSC AUDIO PRODUCTS, THAT MAY NOT BE DISCLOSED, REPRODUCED OR USED WITHOUT EXPRESS WRITTEN CONSENT FROM QSC AUDIO PRODUCTS.

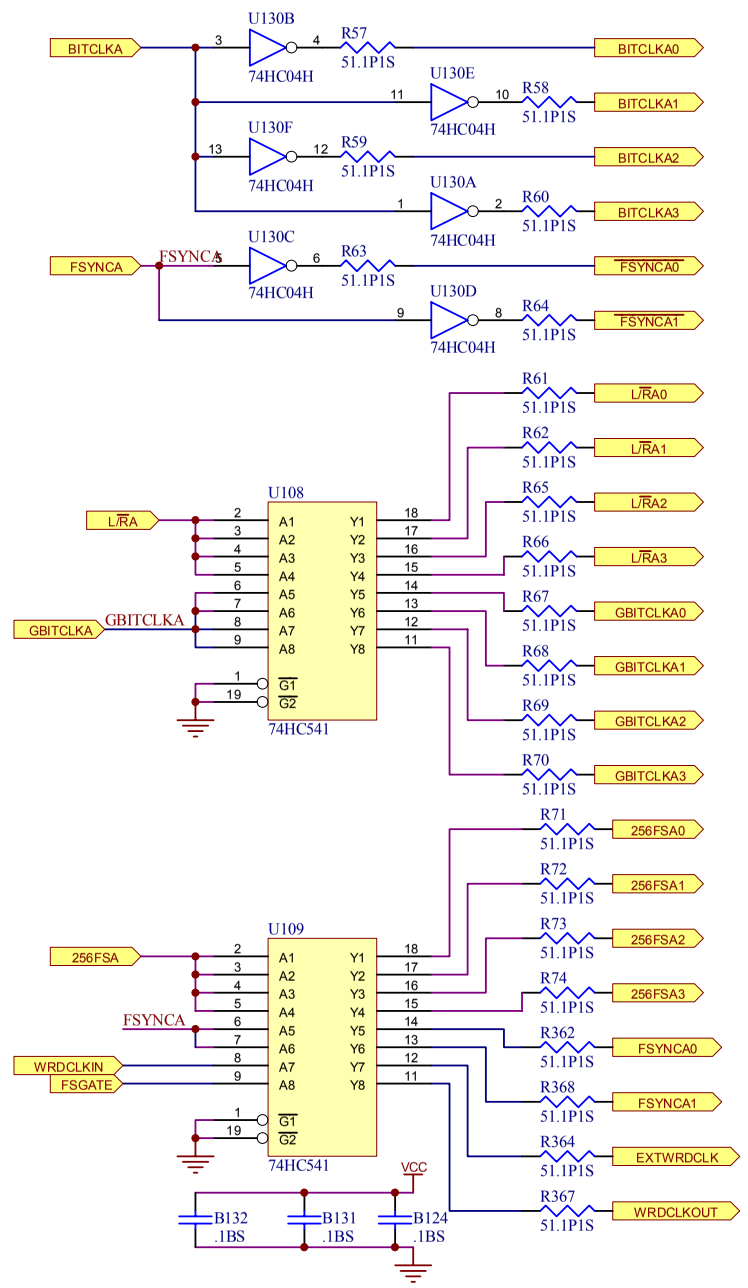

Error : QSCLOGO.BMP file not found.

AUDIO PRODUCTS, INC.
1675 MACARTHUR BLVD.
COSTA MESA, CA 92626

Title: **RAVE Analog I\O Signal Drivers**

Size: B | Number: **SH-000861-00** | Rev **B**

File: C:\DATA\schematics\Rave_revB\Qscabblk.DDB - Documents\qscaBalg.sch

Date: 12-Dec-2001 | Eng: Karl Fitzke | Sheet 17 of 36

THIS DOCUMENT CONTAINS PROPRIETARY INFORMATION WHICH IS THE PROPERTY OF QSC AUDIO PRODUCTS, THAT MAY NOT BE DISCLOSED, REPRODUCED OR USED WITHOUT EXPRESS WRITTEN CONSENT FROM QSC AUDIO PRODUCTS.

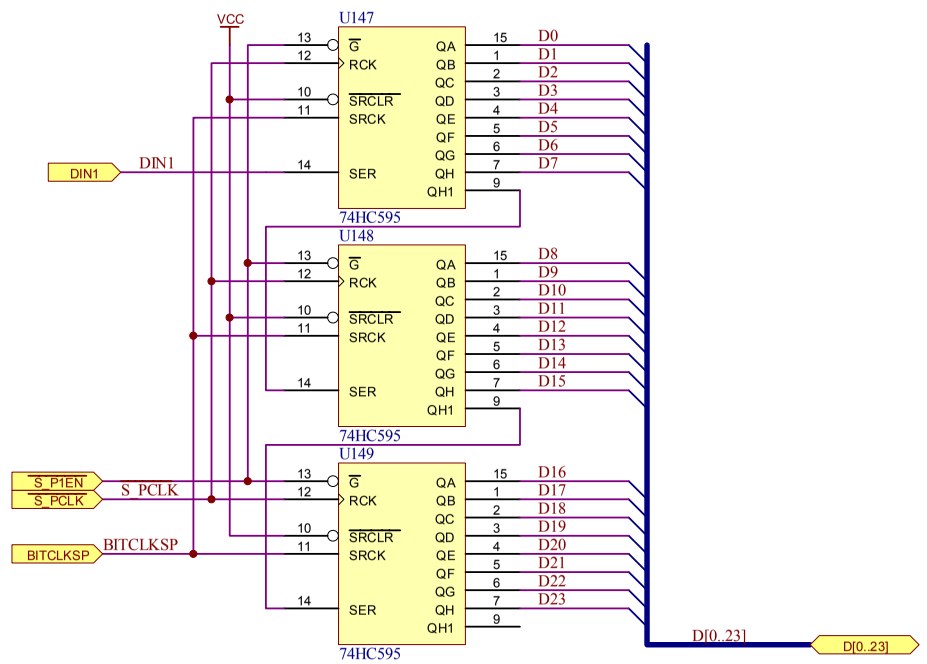

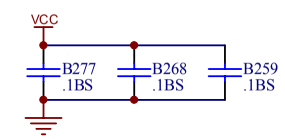

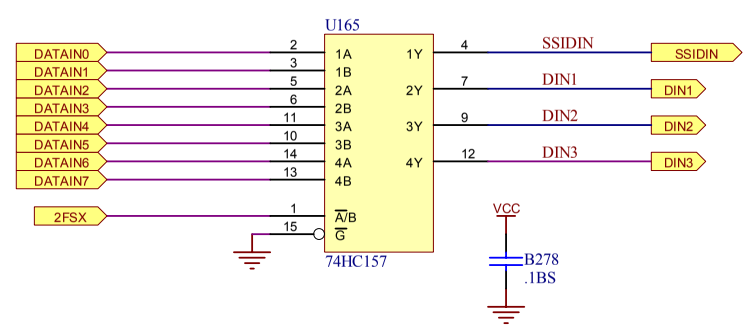

Error : QSCLOGO.BMP file not found.

AUDIO PRODUCTS, INC.
1675 MACARTHUR BLVD.
COSTA MESA, CA 92626

Title: **RAVE Analog Input Multiplexer #0**

Size: B | Number: **SH-000861-00** | Rev **B**

File: C:\DATA\schematics\Rave_revB\Qscabblk.DDB - Documents\qscaBmux.sch

Date: 12-Dec-2001 | Eng: Karl Fitzke | Sheet 18 of 36

THIS DOCUMENT CONTAINS PROPRIETARY INFORMATION WHICH IS THE PROPERTY OF QSC AUDIO PRODUCTS, THAT MAY NOT BE DISCLOSED, REPRODUCED OR USED WITHOUT EXPRESS WRITTEN CONSENT FROM QSC AUDIO PRODUCTS.

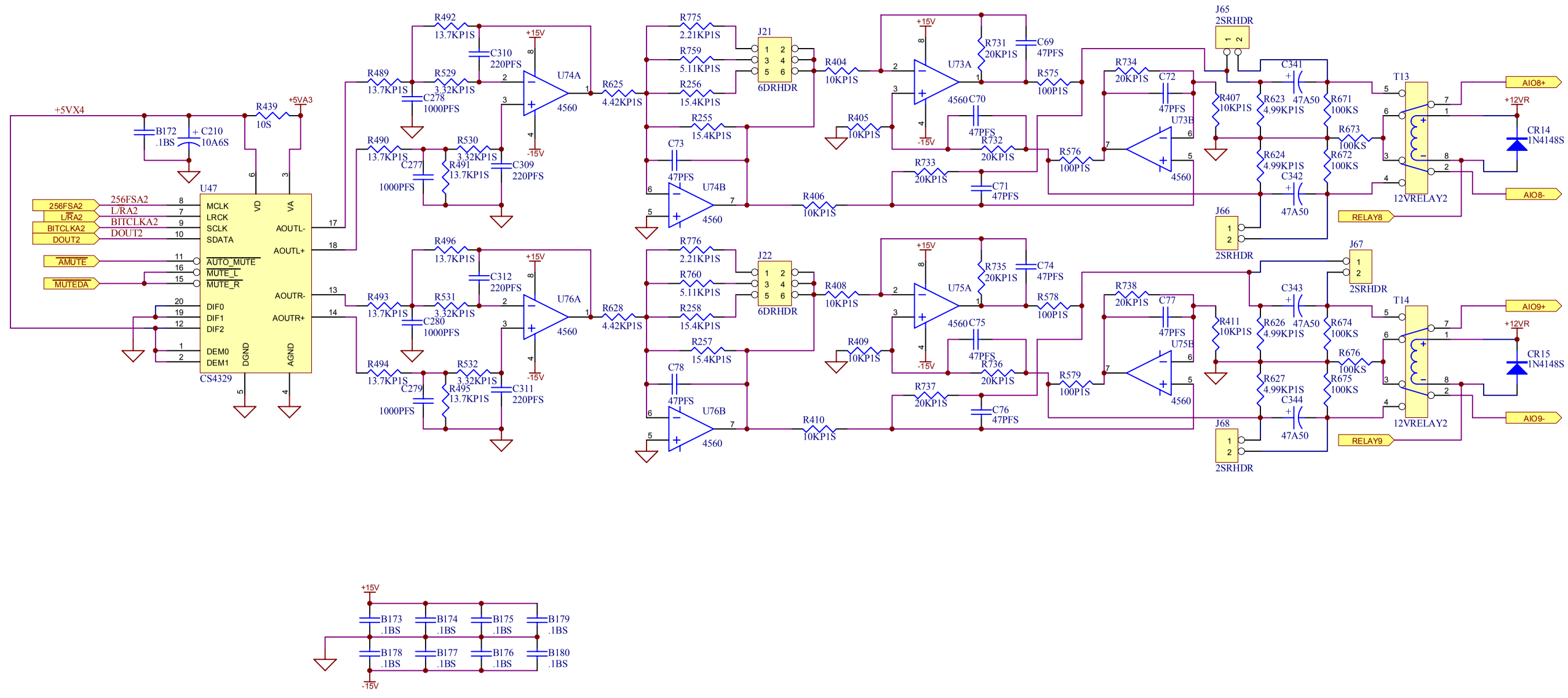

Error : QSCLOGO.BMP file not found.

AUDIO PRODUCTS, INC.
1675 MACARTHUR BLVD.
COSTA MESA, CA 92626

Title: **RAVE Analog, Outputs #8-9**

Size: B | Number: **SH-000861-00** | Rev **B**

File: C:\DATA\schematics\Rave_revB\Qscabblk.DDB - Documents\qscaBao4.sch

Date: 12-Dec-2001 | Eng: Karl Fitzke | Sheet 23 of 36

THIS DOCUMENT CONTAINS PROPRIETARY INFORMATION WHICH IS THE PROPERTY OF QSC AUDIO PRODUCTS, THAT MAY NOT BE DISCLOSED, REPRODUCED OR USED WITHOUT EXPRESS WRITTEN CONSENT FROM QSC AUDIO PRODUCTS.

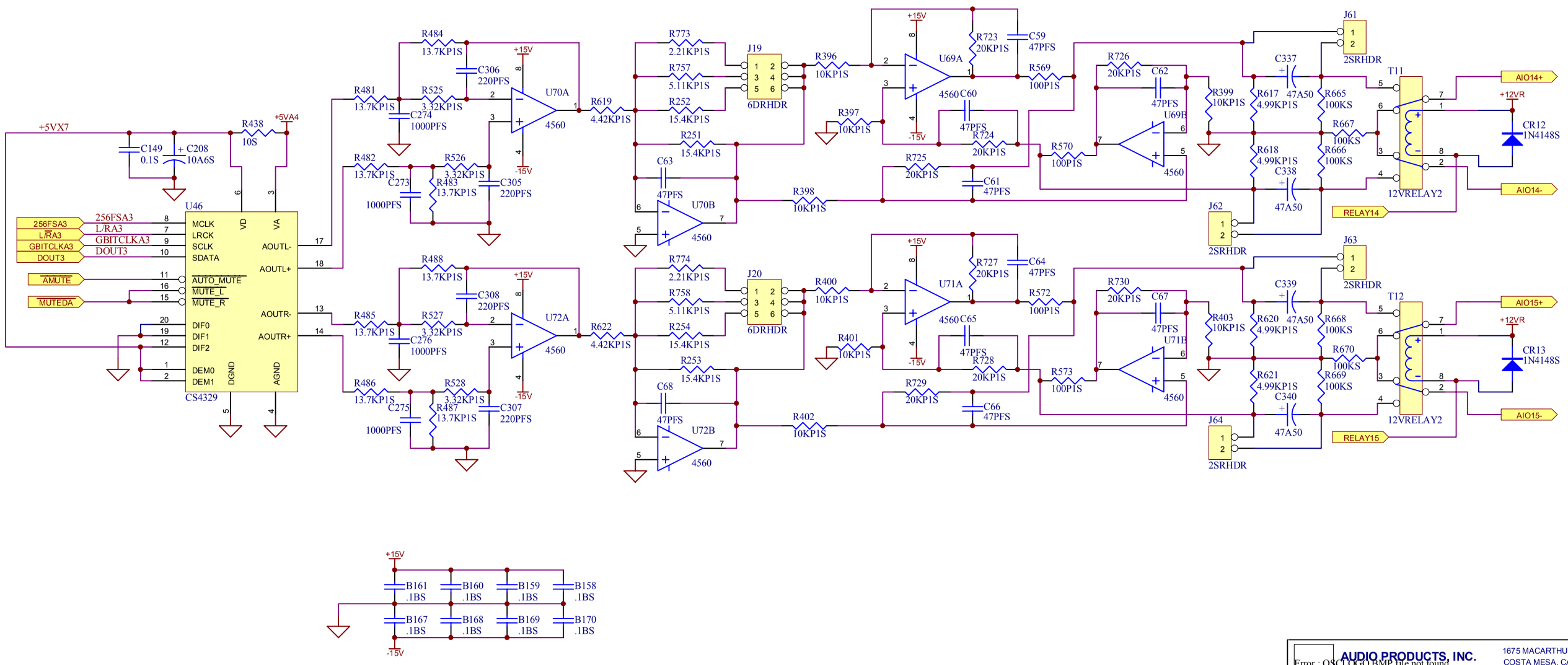

Error : QSCLOGO.BMP file not found.

AUDIO PRODUCTS, INC.
1675 MACARTHUR BLVD.
COSTA MESA, CA 92626

Title: **RAVE Analog Outputs #14-15**

Size: B | Number: **SH-000861-00** | Rev **B**

File: C:\DATA\schematics\Rave_revB\Qscabblk.DDB - Documents\qscaBao7.sch

Date: 12-Dec-2001 | Eng: Karl Fitzke | Sheet 24 of 36

THIS DOCUMENT CONTAINS PROPRIETARY INFORMATION WHICH IS THE PROPERTY OF QSC AUDIO PRODUCTS, THAT MAY NOT BE DISCLOSED, REPRODUCED OR USED WITHOUT EXPRESS WRITTEN CONSENT FROM QSC AUDIO PRODUCTS.

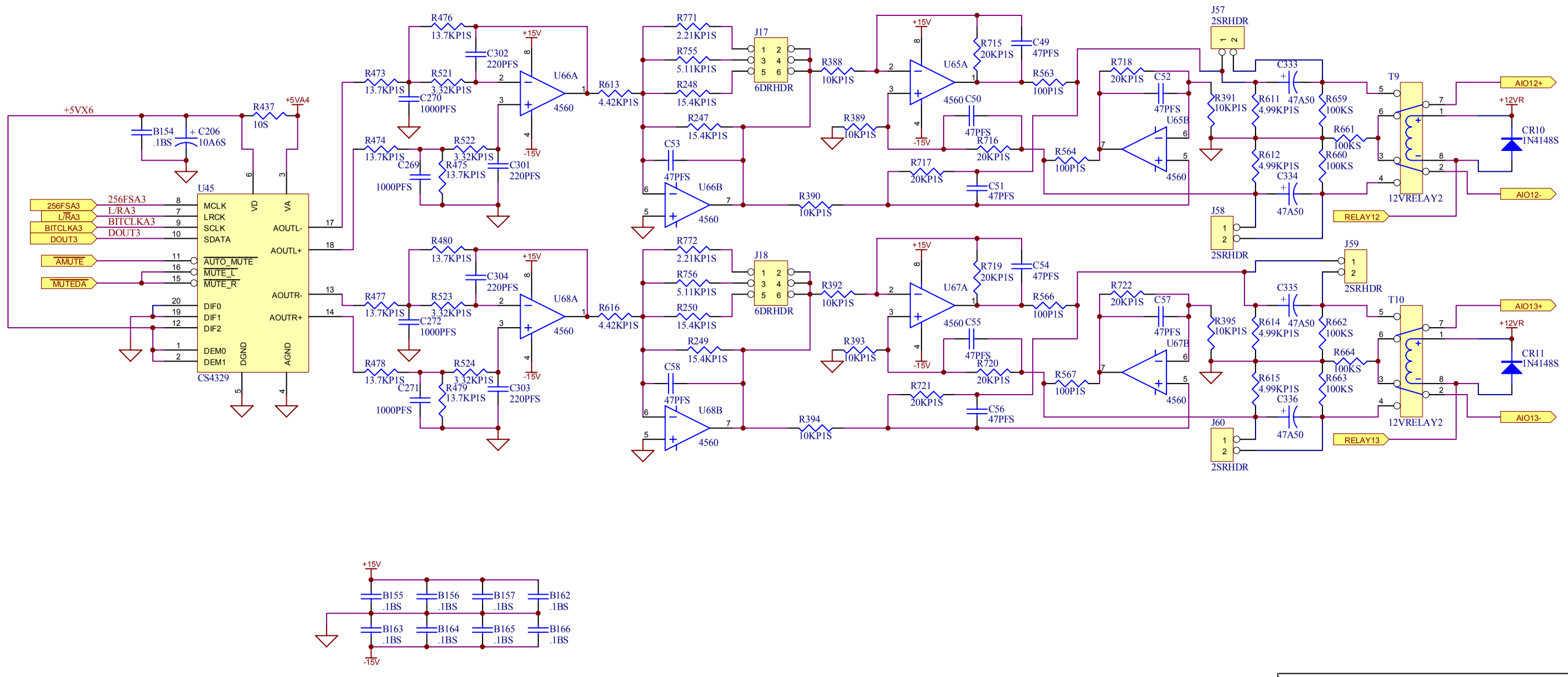

Error : QSCLOGO.BMP file not found.

AUDIO PRODUCTS, INC.
1675 MACARTHUR BLVD.
COSTA MESA, CA 92626

Title: **RAVE Analog Outputs #12-13**

Size: B | Number: **SH-000861-00** | Rev **B**

File: C:\DATA\schematics\Rave_revB\Qscabblk.DDB - Documents\qscaBao6.sch

Date: 12-Dec-2001 | Eng: Karl Fitzke | Sheet 25 of 36

THIS DOCUMENT CONTAINS PROPRIETARY INFORMATION WHICH IS THE PROPERTY OF QSC AUDIO PRODUCTS, THAT MAY NOT BE DISCLOSED, REPRODUCED OR USED WITHOUT EXPRESS WRITTEN CONSENT FROM QSC AUDIO PRODUCTS.

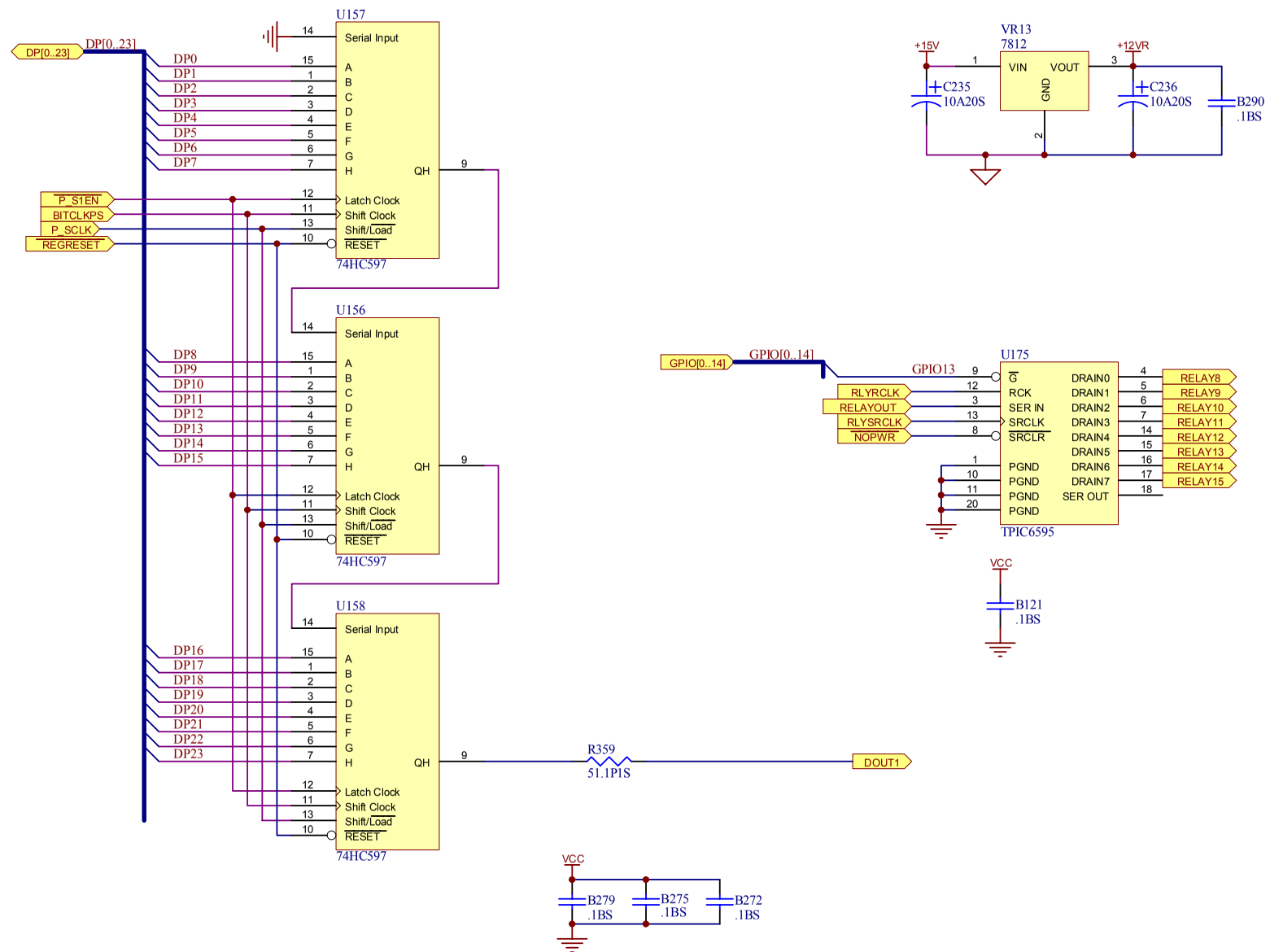

Error : QSCLOGO.BMP file not found.

AUDIO PRODUCTS, INC.
1675 MACARTHUR BLVD.
COSTA MESA, CA 92626

Title: **RAVE Analog, P/S #1 & Relay**

Size: B | Number: **SH-000861-00** | Rev **B**

File: C:\DATA\schematics\Rave_revB\Qscabblk.DDB - Documents\qscaBmo1.sch

Date: 12-Dec-2001 | Eng: Karl Fitzke | Sheet 26 of 36

THIS DOCUMENT CONTAINS PROPRIETARY INFORMATION WHICH IS THE PROPERTY OF QSC AUDIO PRODUCTS, THAT MAY NOT BE DISCLOSED, REPRODUCED OR USED WITHOUT EXPRESS WRITTEN CONSENT FROM QSC AUDIO PRODUCTS.

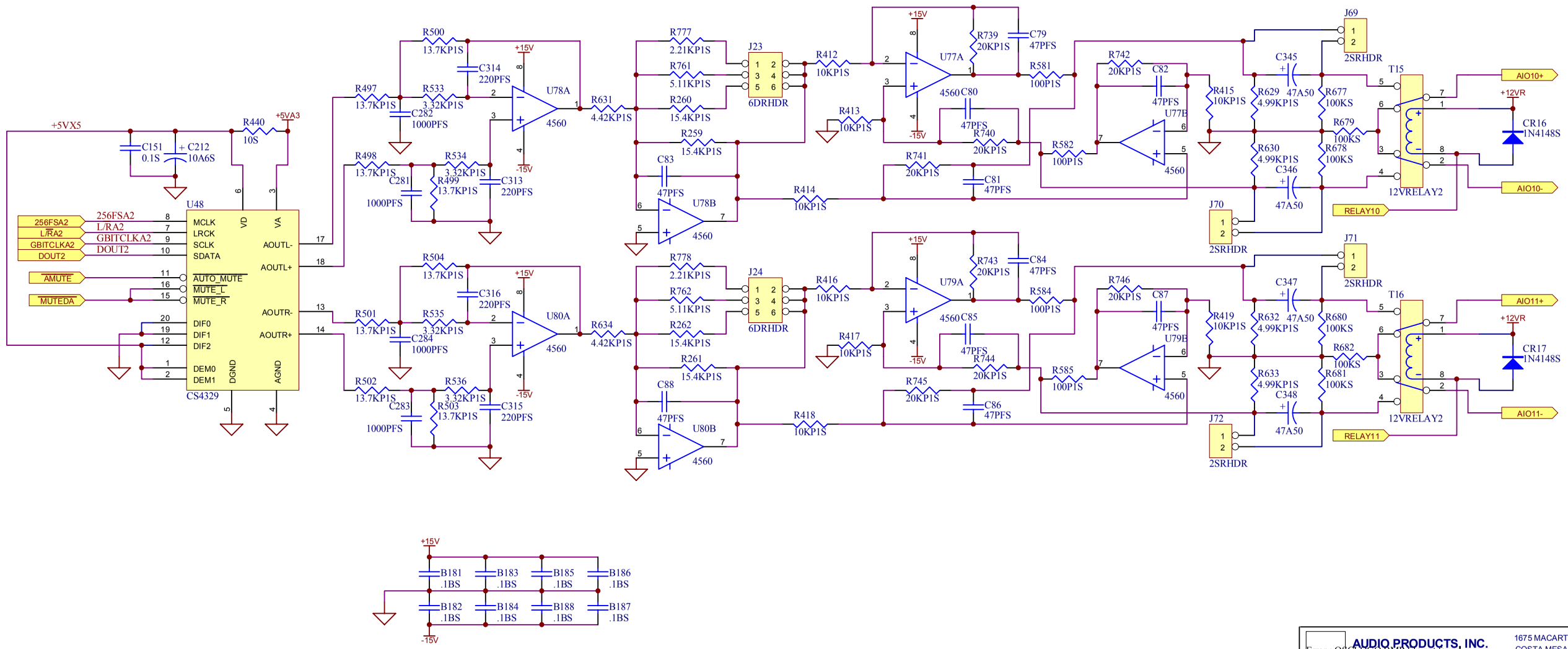

Error : QSCLOGO.BMP file not found.

AUDIO PRODUCTS, INC.
1675 MACARTHUR BLVD.
COSTA MESA, CA 92626

Title: **RAVE Analog Outputs #10-11**

Size: B | Number: **SH-000861-00** | Rev **B**

File: C:\DATA\schematics\Rave_revB\Qscabblk.DDB - Documents\qscaBao5.sch

Date: 12-Dec-2001 | Eng: Karl Fitzke | Sheet 30 of 36

THIS DOCUMENT CONTAINS PROPRIETARY INFORMATION WHICH IS THE PROPERTY OF QSC AUDIO PRODUCTS, THAT MAY NOT BE DISCLOSED, REPRODUCED OR USED WITHOUT EXPRESS WRITTEN CONSENT FROM QSC AUDIO PRODUCTS.

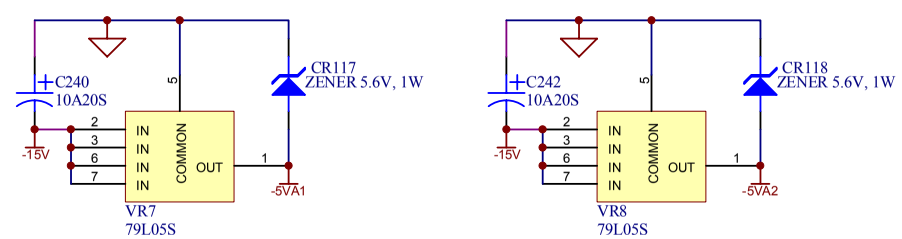

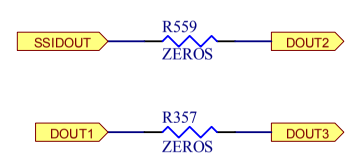

Error : QSCLOGO.BMP file not found.

AUDIO PRODUCTS, INC.
1675 MACARTHUR BLVD.
COSTA MESA, CA 92626

Title: **RAVE Analog, -5V Voltage Reg**

Size: B | Number: **SH-000861-00** | Rev **B**

File: C:\DATA\schematics\Rave_revB\Qscabblk.DDB - Documents\qscaBvr2.sch

Date: 12-Dec-2001 | Eng: Karl Fitzke | Sheet 32 of 36

THIS DOCUMENT CONTAINS PROPRIETARY INFORMATION WHICH IS THE PROPERTY OF QSC AUDIO PRODUCTS, THAT MAY NOT BE DISCLOSED, REPRODUCED OR USED WITHOUT EXPRESS WRITTEN CONSENT FROM QSC AUDIO PRODUCTS.

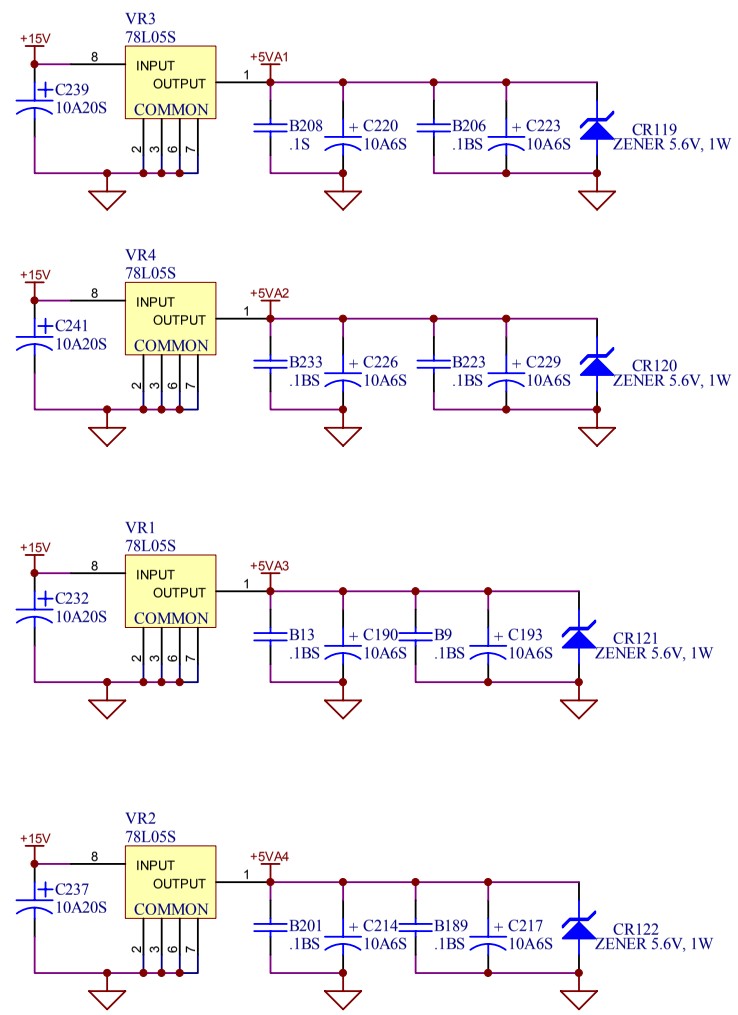

Error : QSCLOGO.BMP file not found.

AUDIO PRODUCTS, INC.
1675 MACARTHUR BLVD.
COSTA MESA, CA 92626

Title: **RAVE Analog, +5V Voltage Reg**

Size: B | Number: **SH-000861-00** | Rev **B**

File: C:\DATA\schematics\Rave_revB\Qscabblk.DDB - Documents\qscaBvrp.sch

Date: 12-Dec-2001 | Eng: Karl Fitzke | Sheet 33 of 36

THIS DOCUMENT CONTAINS PROPRIETARY INFORMATION WHICH IS THE PROPERTY OF QSC AUDIO PRODUCTS, THAT MAY NOT BE DISCLOSED, REPRODUCED OR USED WITHOUT EXPRESS WRITTEN CONSENT FROM QSC AUDIO PRODUCTS.

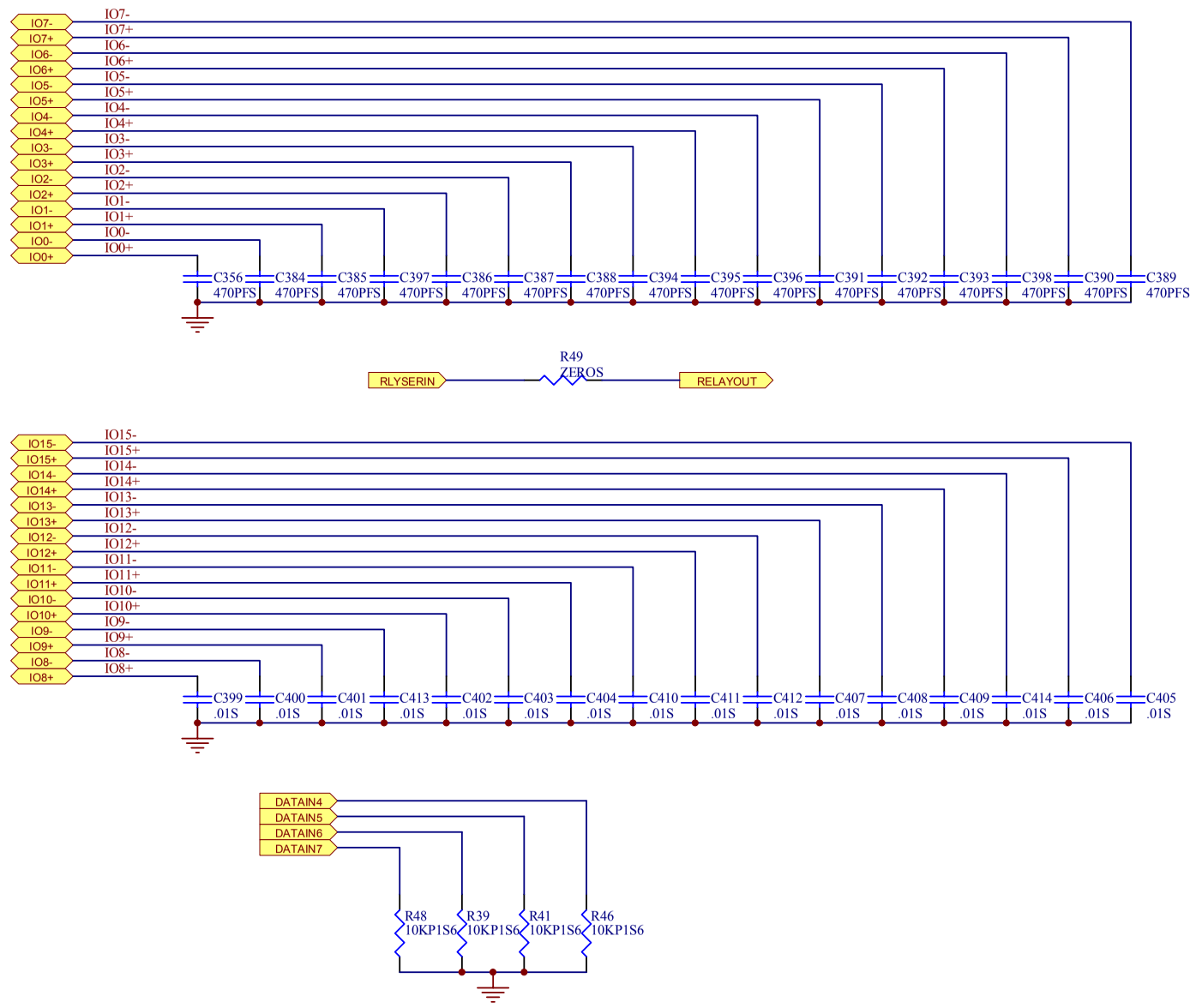

Error : QSCLOGO.BMP file not found.

AUDIO PRODUCTS, INC.
1675 MACARTHUR BLVD.
COSTA MESA, CA 92626

Title: **RAVE Analog, Audio Output Caps**

Size: B | Number: **Sh-000861-00** | Rev **B**

File: C:\DATA\schematics\Rave_revB\Qscabblk.DDB - Documents\qscaBcp8.sch

Date: 12-Dec-2001 | Eng: Karl Fitzke | Sheet 34 of 36

THIS DOCUMENT CONTAINS PROPRIETARY INFORMATION WHICH IS THE PROPERTY OF QSC AUDIO PRODUCTS, THAT MAY NOT BE DISCLOSED, REPRODUCED OR USED WITHOUT EXPRESS WRITTEN CONSENT FROM QSC AUDIO PRODUCTS.

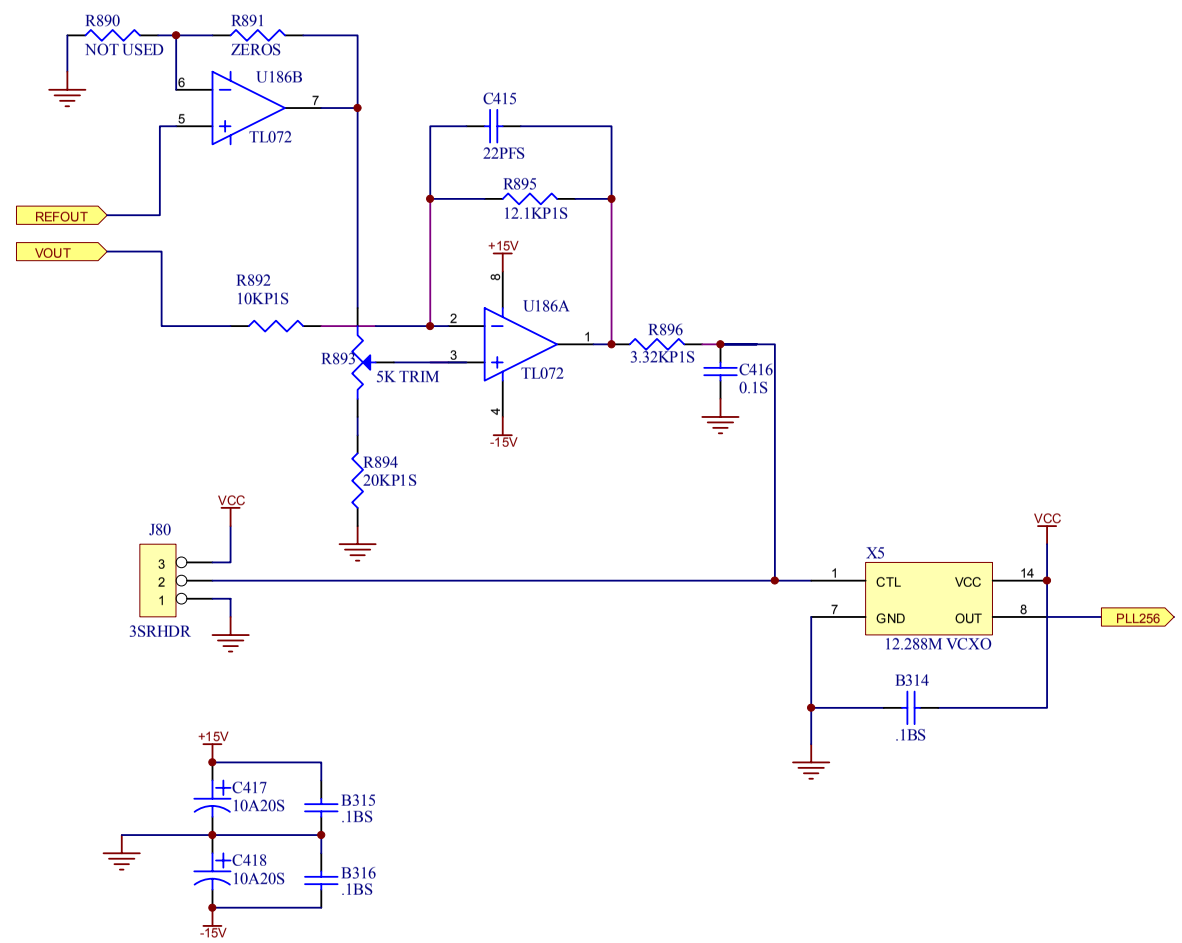

Error : QSCLOGO.BMP file not found.

AUDIO PRODUCTS, INC.
1675 MACARTHUR BLVD.
COSTA MESA, CA 92626

Title: RAVE Analog PLL / VCXO

Size: B | Number: SH-000861-00 | Rev B

File: C:\DATA\schematics\Rave_revB\Qscabblk.DDB - Documents\qscaBpll.sch

Date: 12-Dec-2001 | Eng: Karl Fitzke | Sheet 35 of 36